Blind Compute-and-Forward

Daniel Severo

Federal University of Santa Catarina (UFSC)

danielsouzasevero@gmail.com

January, 2015

Compute-and-Forward

Nazar & Gastpar (2006/2011)

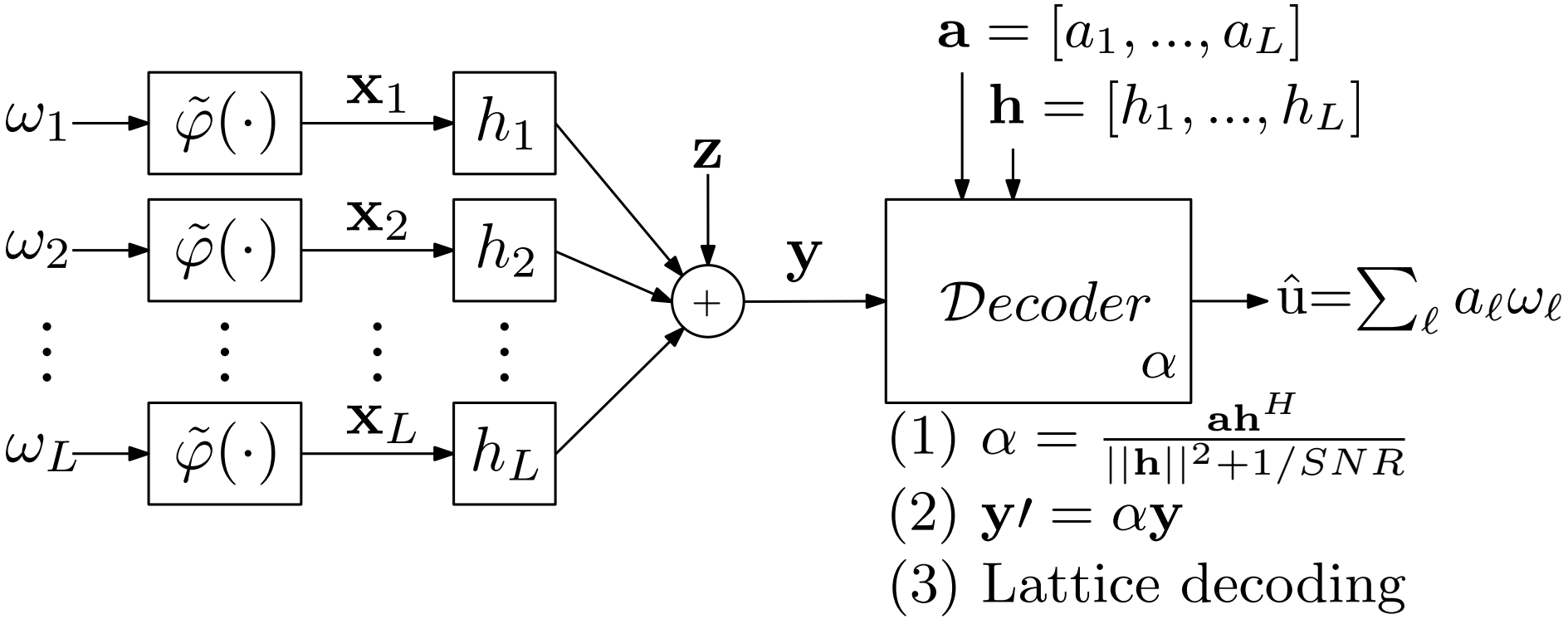

Objective: Decode a linear combination

Difficulty: Requires knowledge of **h** (channel state information)

Blind Compute-and-Forward

Chen, Silva & Kschischang (2012)

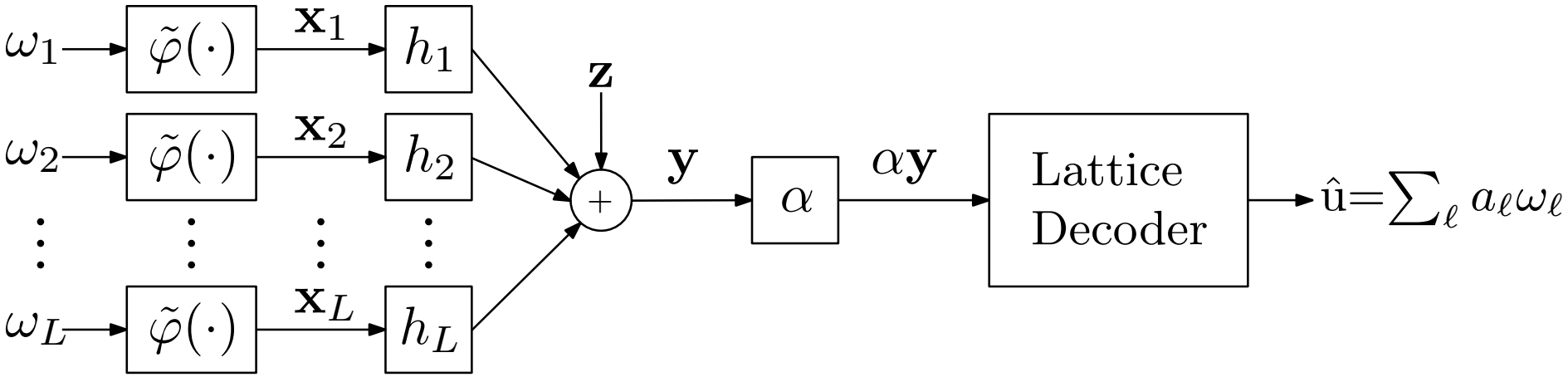

Blind Compute-and-Forward

Chen, Silva & Kschischang (2012)

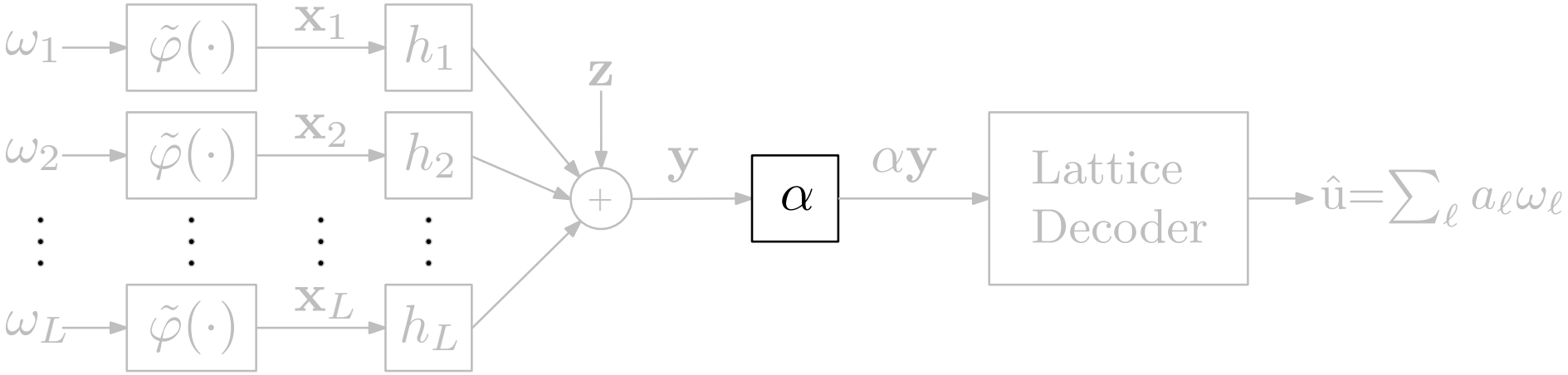

Main idea: We need not the best (optimal) α, a scalar that is *good* enough for successful decoding will suffice.

New objective: Find a *good* α with no knowledge of **h** or **a**.

Current progress: Chen et al. provide a quick detection algorithm of low complexity that can reject bad α's. The searching space is chosen heuristically.

Blind Compute-and-Forward

Chen, Silva & Kschischang (2012)

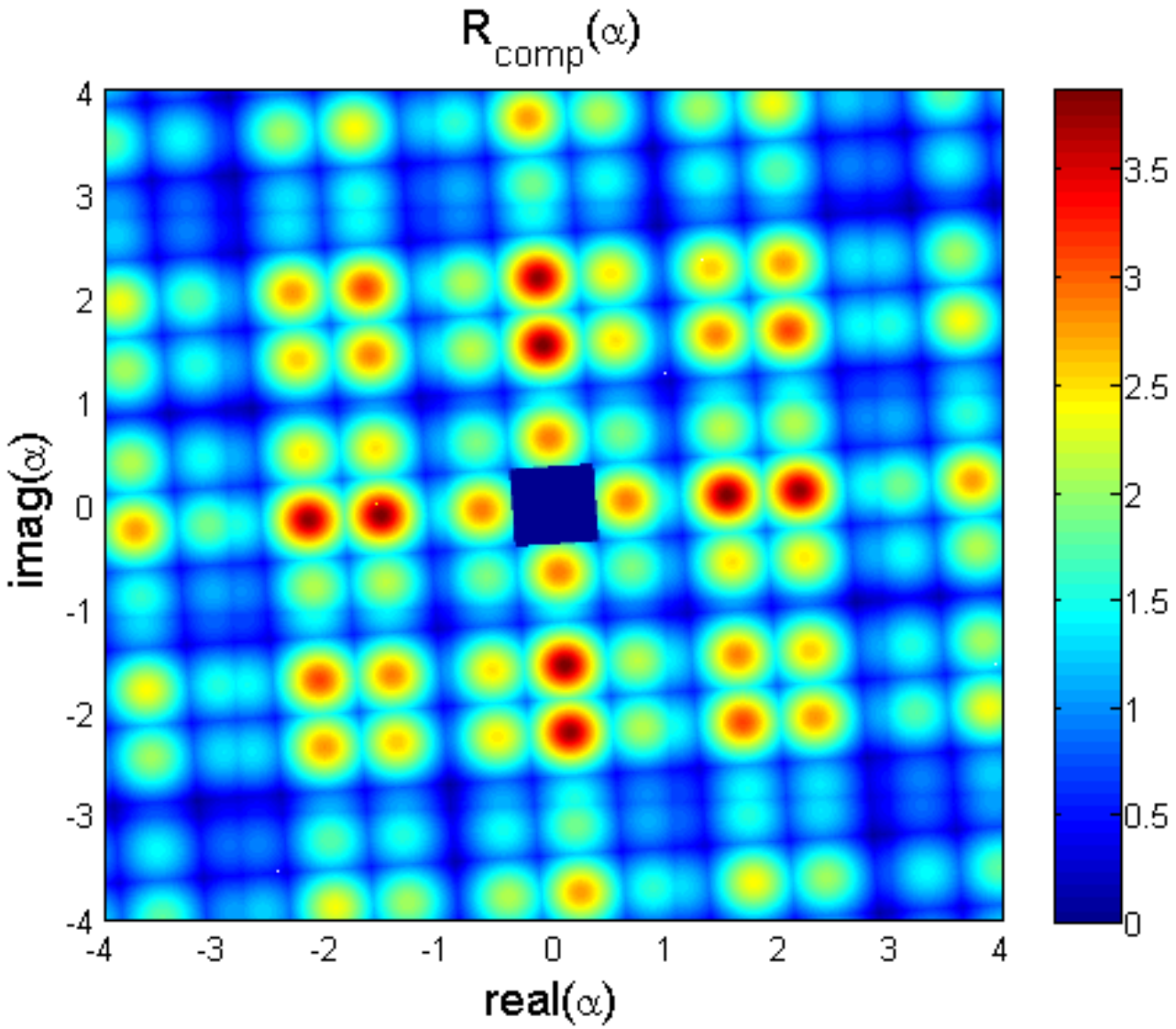

Current Work

(1) Gain insight on the estimated good region.

(2) Investigate a good way to search for α's.

(3) Reduce the complexity of the estimation algorithm

(4) Generalize the scheme for other modulations besides 4-QAM.

References

(1) C. Feng, D. Silva, and F. R. Kschischang, "Blind compute-and-forward," in *Proc. of IEEE Int. Symp. on Inf. Theory*, Cambridge, MA, Jul. 1–6, 2012, pp. 408–412.

(2) B. Nazer and M. Gastpar, "Compute-and-forward: Harnessing interference through structured codes," *IEEE Trans. Inf. Theory*, vol. 57, no. 10, pp. 6463–6486, Oct. 2011.